**Most**
**Dependable**
**Fountains, Inc.**

---

## OPERATIONS MANUAL

# MODELS:
# 700-A SM & 700-A SMSS

Most Dependable Fountains, Inc™
5705 Commander Drive
Arlington, TN 38002
800-552-6331
www.mostdependable.com

MOST DEPENDABLE FOUNTAINS, INC.
5705 COMMANDER DR. P.O. BOX 587
ARLINGTON, TN 38002-0587
TOLL FREE: 1-800-552-6331
PHONE: (901) 867-0039
FAX: (901) 867-0159
www.mostdependable.com

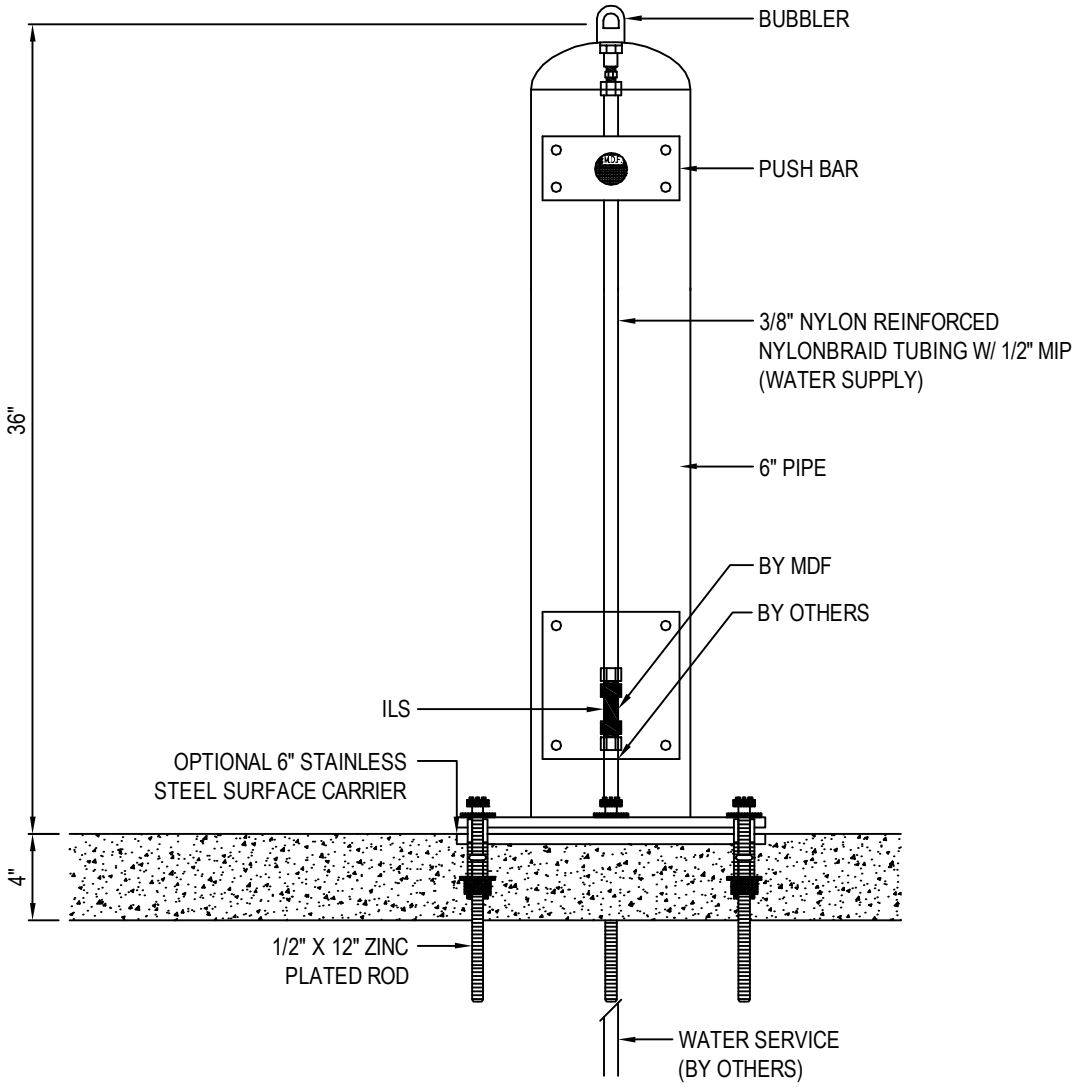


NOTES:

1. SHOWN WITH OPTIONAL 6" STAINLESS STEEL SURFACE CARRIER.
2. INSTALLATION TO BE COMPLETED IN ACCORDANCE WITH MANUFACTURER'S SPECIFICATIONS.
3. DO NOT SCALE DRAWING.
4. THIS DRAWING IS INTENDED FOR USE BY ARCHITECTS, ENGINEERS, CONTRACTORS, CONSULTANTS AND DESIGN PROFESSIONALS FOR PLANNING PURPOSES ONLY. THIS DRAWING MAY NOT BE USED FOR CONSTRUCTION.
5. ALL INFORMATION CONTAINED HEREIN WAS CURRENT AT THE TIME OF DEVELOPMENT BUT MUST BE REVIEWED AND APPROVED BY THE PRODUCT MANUFACTURER TO BE CONSIDERED ACCURATE.
6. CONTRACTOR'S NOTE: FOR PRODUCT AND COMPANY INFORMATION VISIT www.CADdetails.com/info AND ENTER REFERENCE NUMBER 3354-7.1.

# MODEL 700-A SM

SHOWN W/ OPTIONAL 6" SS SURFACE CARRIER

3354-7.1

REVISION DATE 06/13/2016

PROTECTED BY COPYRIGHT ©2016 CADDETAILS.COM LTD.

# ECONOMY SERIES DRINKING FOUNTAIN SPECIFICATIONS

| | |
|---|---|
| ***WATER QUALITY (LEAD FREE)*** | Section 9, California Proposition 6 and the Federal Safe Drinking Water Act. |
| ***STANDARD PEDESTAL*** | One piece weld construction with MDF standard 3/16" wall thickness. |
| ***BUBBLER HEAD -A- only*** | Stainless steel anti-squirt head (weighing a pound and a half) mounted with lock nut and washer to prevent tampering. Lock nut pin holds bubbler in locked position to prevent twisting or turning. The MDF bubbler head's unique design features a constant steady stream trajectory and a built in natural shield from contamination. |
| ***BUBBLER HEAD -B- only*** | Push Button Bubbler with cartridge. |
| ***PUSH BAR -A- only*** | 304 stainless steel with circumference exceeding 8.6". Mushroom style push bar overlaps and prevents sand and other objects from sticking push bar in the ON position. Stainless steel bubbler housing standard. |
| ***CONTROL VALVE -A- only*** | Self closing valve requires less than 5 lbs to operate. Non-cartridge O-ring valve delivers steady stream of water through an adjustable valve. This valve design is to operate and function at 30 to 80 PSI. Ideal operating pressure is 60 PSI. |
| ***WATER SUPPLY (LEAD FREE)*** | Maintenance free reinforced nylobraid tubing that is NSF-61 certified. **This tubing is not plastic**. It is supplied with a 1/2" MIP threaded inlet with stainless steel strainer. Union fittings at every connection. Supply line stops above grade. |
| ***WASTE*** | All waste external. |
| ***FINISH*** | Oven baked powder coat. Choice of colors are: ☐ green, ☐ blue, ☐ black, ☐ red, ☐ yellow, ☐ orange, and ☐ white. Textured color choices: ☐ emerald, ☐ sapphire, ☐ pyrite, ☐ text-black, ☐ burgundy, ☐ gold vein, ☐ copper and ☐ sandstone. |
| ***ACCESS*** | Supply and waste connections are through the above grade access door. All access plates, brackets, vandal resistant bolts and screws are stainless steel. |
| ***INSTALLATION*** | **Surface Mount** installation, is designed to be anchored on top of an existing surface (concrete, etc.) with anchor bolts through a mounting plate that is welded to the fountain. Surface Mount Fountains provide an access door with vandal resistant stainless steel screws. Surface mount carrier recommended for all surface mount installations. Access door standard on all pedestal fountains. |
| ***WINTERIZATION*** | Shut off water and drain down. |
| ***WARRANTY*** | One year warranty, labor not included. |
| ***SHIPPING WEIGHT*** | Model 700 SM A & B..... 65 lbs  Model 740 SM A & B..... 85 lbs |


**MOST DEPENDABLE FOUNTAINS, INC.™**
**(800) 552-6331 • (901) 867-0039 • Fax (901) 867-4008**
5705 COMMANDER DR. • ARLINGTON, TN 38002-0587
www.mostdependable.com


CLASSIFIED UL LEAD FREE NSF Certified to NSF/ANSI 61

# INSTALLATION INSTRUCTIONS

Most Dependable Fountains, Inc.™

All **SM (surface mount)** products are designed to be installed on the surface of a new or existing concrete slab. Your contractor needs to provide a 1 ½" PVC drain line **(when applicable)** and water line thru finish grade. Connections are made to our SM products thru our access door, as shown on detail drawings. The water tubing is provided with a ½" male iron pipe connection. This is an excellent location for a cutoff valve. Surface Mount units are anchored to the existing concrete by means of ½" concrete shields with bolts or we recommend ½" quick bolts.

**Note:** We offer an optional template which is designed to be poured in the concrete slab. It comes with the necessary vandal resist stainless steel bolts and washers need to anchor.

---

All **DB (direct bury)** products are designed to be installed to a depth of 14" below grade. MDF provides 1 ½" PVC drain line inside the pedestal **(when applicable)** to point of connection by others. MDF also provides reinforced nylobraid flexible tubing with a ½" male iron pipe thread for connection to water supply by others. MDF recommends an optional valve box using a PVC conduit to the pedestal. By using this option you have complete control of your product.

**Individual detail drawings available Online or by request.**

MDF
MOST DEPENDABLE FOUNTAINS, INC.

For more information:
Most Dependable Fountains, Inc.™
www.mostdependable.com
Info@mostdependable.com
800-552-6331
901-867-0039

# LIMITED PRODUCT WARRANTY

Most Dependable Fountains, Inc.™

Most Dependable Fountains, Inc.™ warrants that all of its products are guaranteed against defective material or poor workmanship for a period of **one year from date of shipment.** Most Dependable Fountains, Inc.™ liability under this warranty shall be discharged by furnishing without charge any goods, or part thereof, which shall appear to the Company upon inspection to be of defective material or not of first class workmanship. Most Dependable Fountains, Inc.™ will not be liable for the cost of repairs, alterations or replacements, or for any expense connected therewith made by the owner or his agents. Most Dependable Fountains, Inc.™ will not be liable for any damages caused by defective materials or poor workmanship, except for replacements, as provided above. Buyer agrees that Most Dependable Fountains, Inc.™ has made no other warranties either expressed or implied in addition to those above stated. The products manufactured by Most Dependable Fountains, Inc.™ is warranted to function if installation and maintenance instructions provided are adhered to. The units also must be used for the purpose for which they were intended.

MDF

MOST DEPENDABLE
FOUNTAINS, INC.