Most Dependable Fountains, INC.
5705 Commander Dr. PO Box 587
Arlington, TN 38002
Phone: (901-867-0039)
www.mostdependable.com

## 1 590 SMSS
1" = 1'-0"

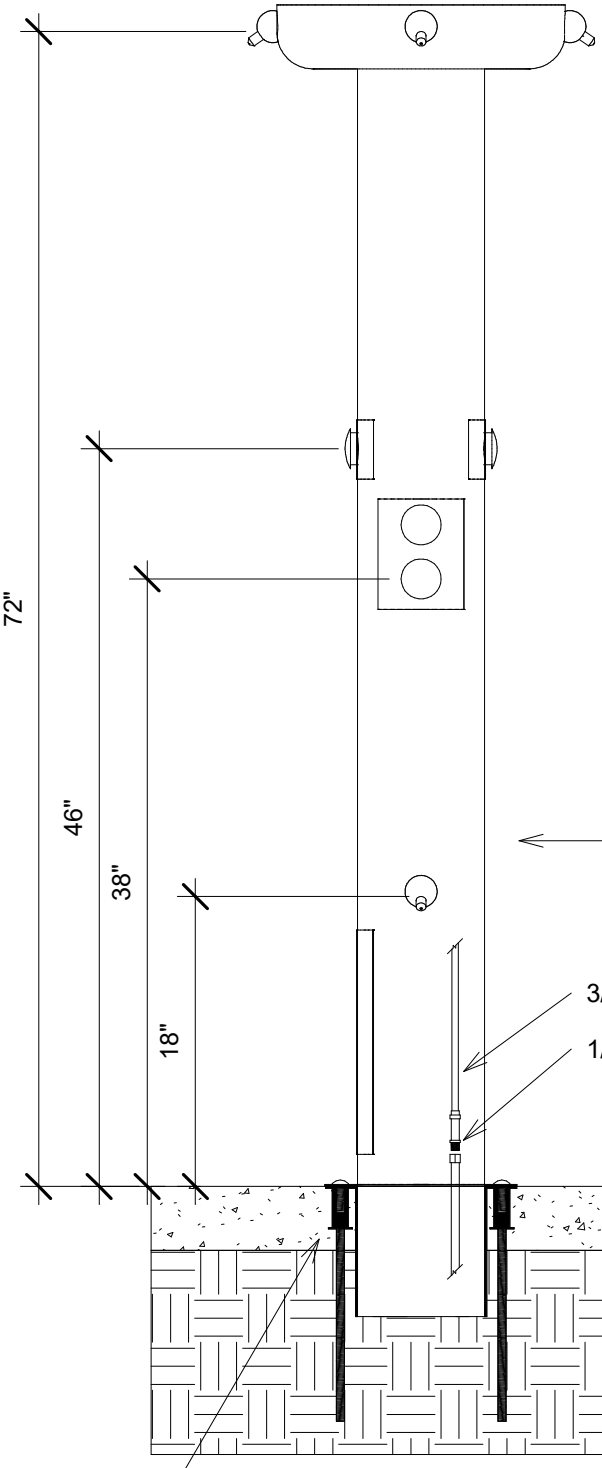


Approval Signature: _____

Color Selection: _____

Material Type:

- ☐ 304 Stainless Steel (SMSS)
- ☐ 316 Stainless Steel (SMSS316)

Installation Options

- ☐ SS Surface Carrier
- ☐ Unattached Valve Box
- ☐ Cut Off Valve Low Point Drain

## 2 Top View
1" = 1'-0"

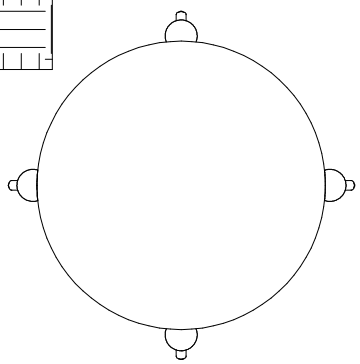

## 3 3D View 1

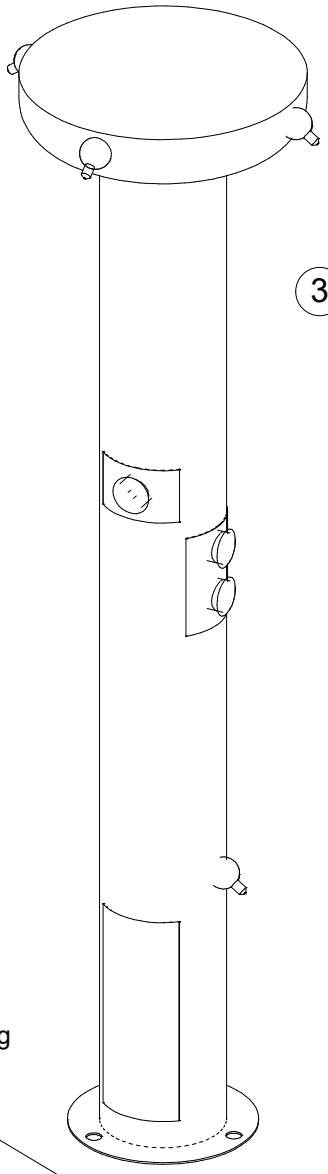

## 4 Mounting Template
1 1/2" = 1'-0"

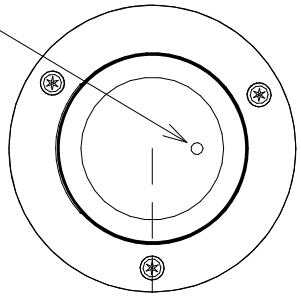

Mounting Bolt Centered
Under Foot Wash